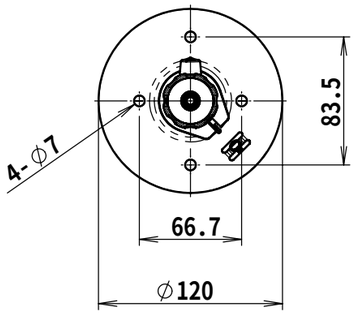


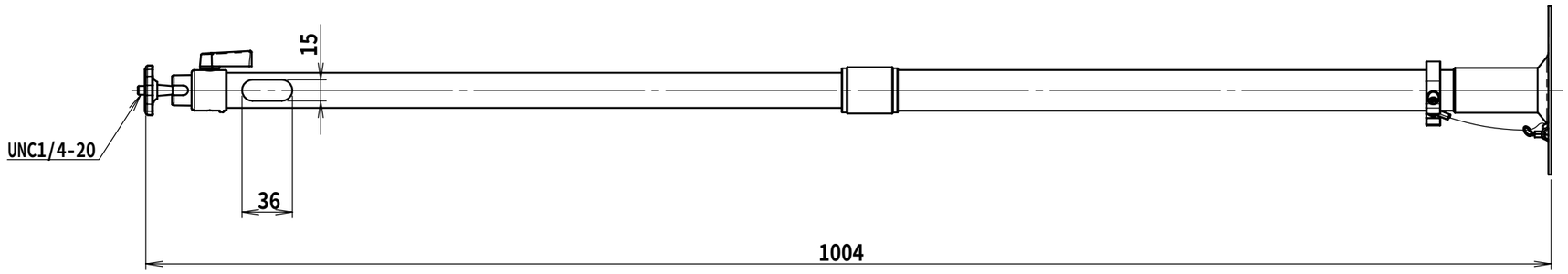


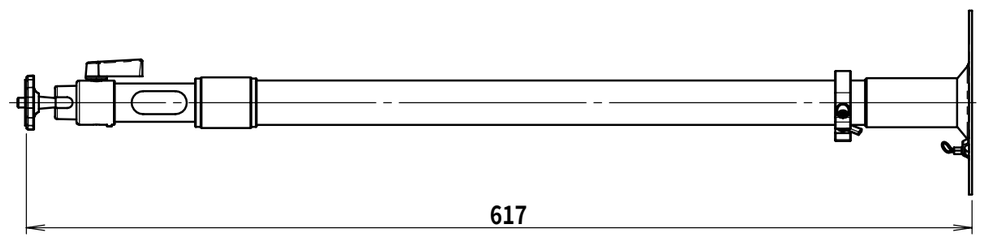


Tokina